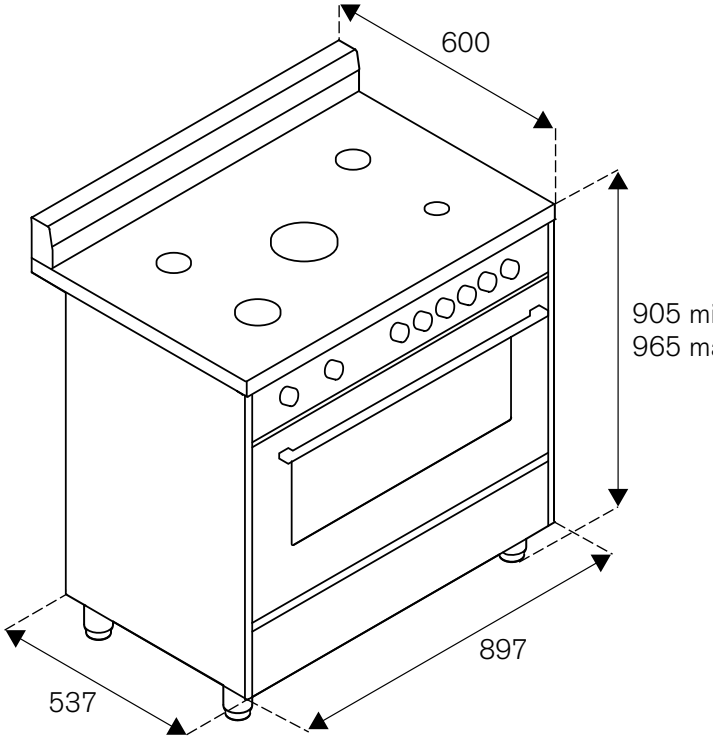
600
905 m
965 m
897
537

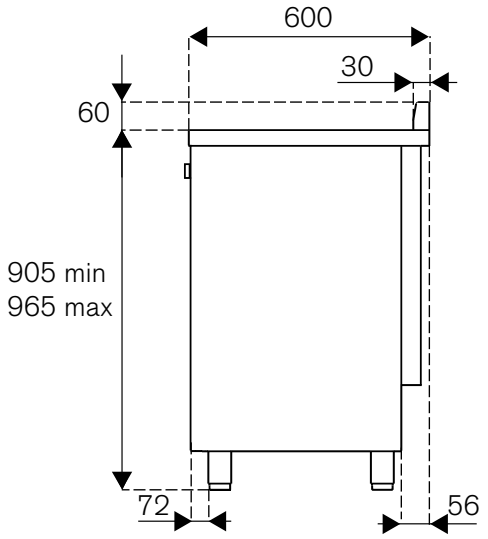
600
30
60
905 min
965 max
72
56

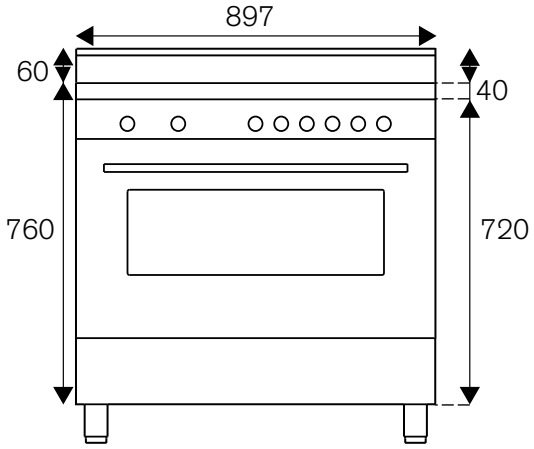
897
60
40
760
720

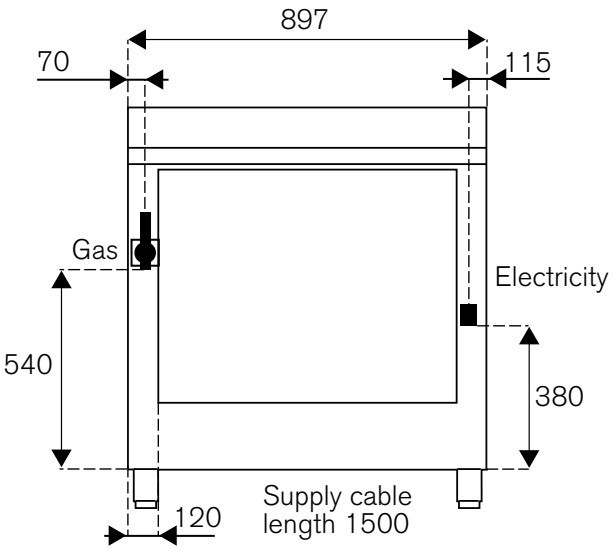
897
70
115
Gas
Electricity
540
380
120
Supply cable
length 1500

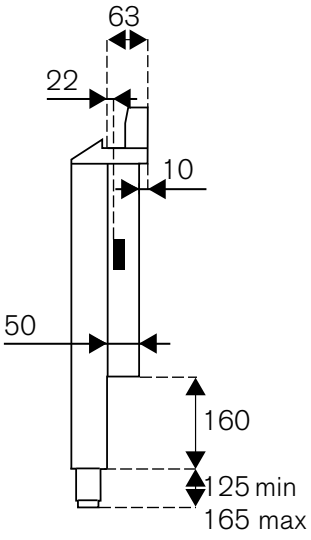
63
22
10
50
160
125 min
165 max